ON-OFF square valves
Series MVPS/BW

KLINGER ITALY SRL - Viale Alcide De Gasperi, 88 — 20017 RHO (MI) ITALY
klinger@klinger.it — www.klinger.it
Tel.: +39 02 933331

Technical data

Size (DN)	DN 8 - 25
Rating	PN 16
Connections	Butt weld (BW)
Plug characteristic	Disc
Actuator	Pneumatic with piston AISI 304
Supply	min 4 / max 8 bar
Temperature	from -30 to +150 °C (tip max 180 °C)



Description

Pneumatic micro-valve square seat with high coefficient of flow, solid construction and compact. Versatility due to the construction of stainless steel for use in harsh environments. They can be employed in several sector as: textile dyeing and finishing plants, chemical plants, water-treating, alimentary, general industrial plants. All Burocco valves are delivered after testing and calibration and ready for a long utilize, without maintenance.

Options

⇒ Normally open (NO)
⇒ Double effect (DE)
⇒ Metallic visual device
⇒ Mechanical limit switch / proximity
⇒ Solenoid
⇒ Electropneumatic converter signal 4-20 Ma
o 0-10 VDC (control plug)
⇒ Special executions on request

DN	C_v	K_{vs}
8	2	1,7
10	3	2,5
15	5	4,3
20	9	7,7
25	14	12

KLINGER reserves the right to make improvements without prior notice 12/16

ON-OFF square valves
Series MVPS/BW

KLINGER ITALY SRL - Viale Alcide De Gasperi, 88—20017 RHO (MI) ITALY
klinger@klinger.it —www.klinger.it
Tel.: +39 02 933331

Materials	
Valve body	AISI 316/316L
Insert plug	PTFE (STD) - PTFE/CG
Stem / Plug	AISI 316/316L
Packing	Standard PTFE ring energized with O-ring FPM
Body gasket	PTFE (STD) - PTFE/CG
Seal actuator	FPM

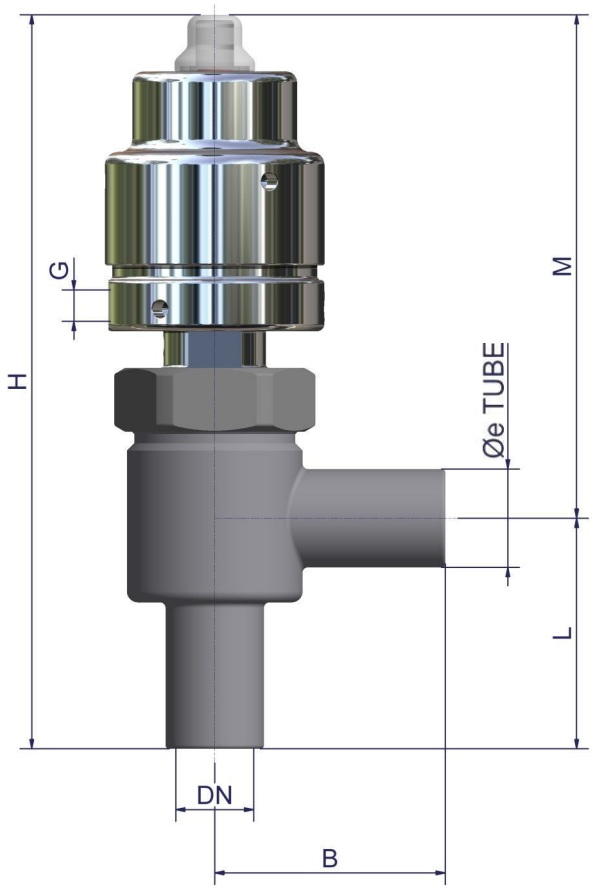

Dimensions (mm)							
DN - servoc.	**B**	**H**	**L**	**M**	**Øe TUBE**	**G**	**weight (Kg) ***
8 - S.32	39	150	39	110	17,2	1/8" G	0,9
10 - S.32	39	150	39	110	17,2	1/8" G	0,9
15 - S.50	63	205	63	140	21,3	1/8" G	1,6
20 - S.50	63	200	63	135	26,9	1/8" G	1,7
25 - S.50	63	200	63	135	33,7	1/8" G	1,7

* Actuator without accessories.

KLINGER reserves the right to make improvements without prior notice 12/16